NON-STRUCTURAL MANUFACTURED HOMI

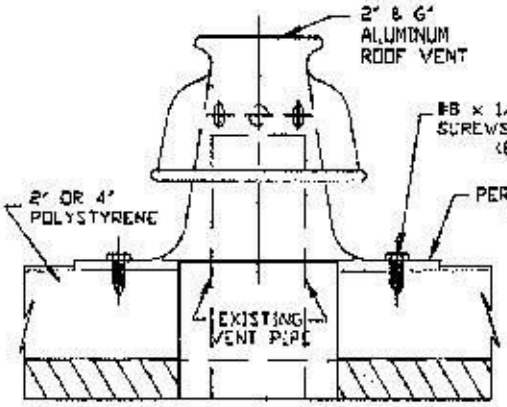

VENT DETAIL

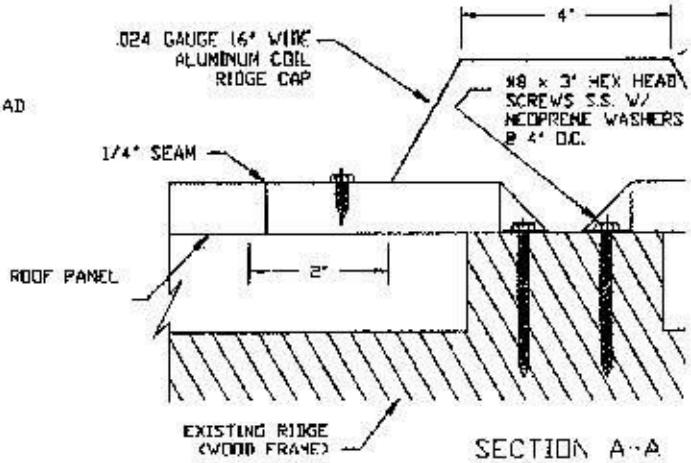

SECTION A-A

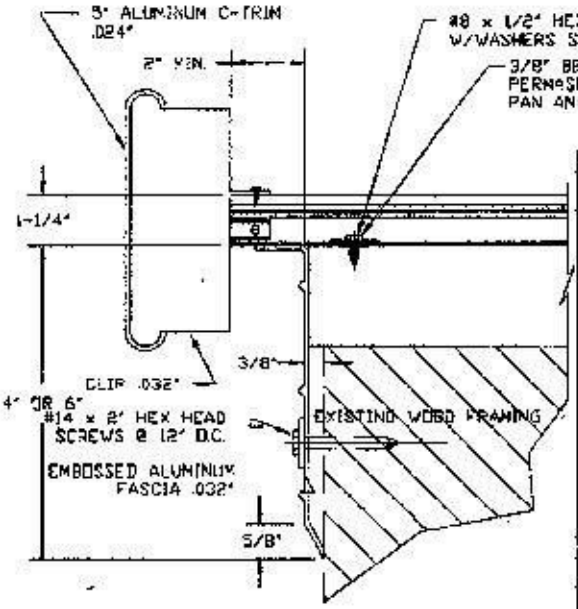

SECTION C-C

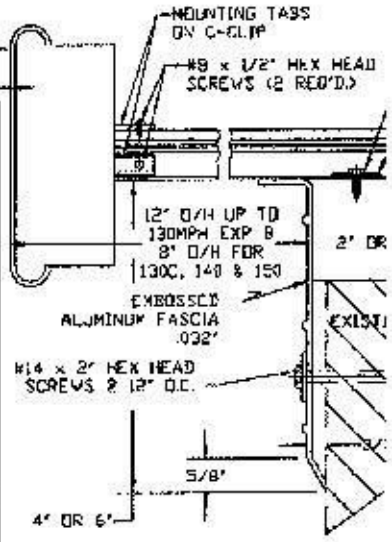

SECTION B-B WITH OVERHA

GENERAL NOTES:

1) THIS DESIGN IS VALID AS A NON-STRUCTURAL ROOF OVERLAY DETAIL OVER EXISTING, STRUCTURALLY SOUND MANUFACTURED HOMES ONLY (INTEGRITY OF EXISTING STRUCTURE OUT OF THE SCOPE OF THIS CERTIFICATION). IT IS INTENDED FOR WATERPROOFING PURPOSES ONLY.
2) THIS DESIGN IS IN ACCORDANCE WITH THE 2004 FLORIDA BUILDING CODE, 2003 INTERNATIONAL BUILDING CODE, BUILDING CODE OF THE STATE OF NEW YORK, AND ASCE 7-98 & 7-02 USING A MAXIMUM MRH=15', I=1.0, Kd=0.85, ROOF SLOPE < 10 DEGREES, V=150MPH, EXPOSURES 'B' AND 'C'.
3) ALUMINUM PANELS SHALL BE MANUFACTURED BY MADDEN MANUFACTURING ONLY AND SHALL BE 3004-H36 ALUMINUM ALLOY OR BETTER.
4) FASTENERS SHALL BE STAINLESS STEEL OR CADMIUM PLATED, OR OTHERWISE CORROSION RESISTANT STEEL ALLOY, PROTECTED FROM ALUMINUM TO PREVENT ELECTROLYSIS.
9) ENGINEER SEAL AFFIXED HERETO VALIDATES STRUCTURAL DESIGN AS SHOWN ONLY. USE OF THIS SPECIFICATION BY CONTRACTOR, et al. INDEMNIFIES AND SAVES HARMLESS THIS ENGINEER FOR ALL COSTS AND DAMAGES INCLUDING LEGAL FEES AND APPELLATE FEES RESULTING FROM MATERIAL FABRICATION, SYSTEM ERECTION, AND CONSTRUCTION PRACTICES BEYOND THAT WHICH IS CALLED FOR BY LOCAL, STATE, AND FEDERAL CODES AND FROM DEVIATIONS OF THIS PLAN.
10) EXCEPT AS EXPRESSLY PROVIDED IN THIS SPECIFICATION, NO ADDITIONAL CERTIFICATIONS OR AFFIRMATIONS ARE INTENDED.
** ALTERATIONS, ADDITIONS, HIGHLIGHTING, OR OTHER MARKINGS TO THIS DOCUMENT ARE NOT PERMITTED AND INVALIDATE OUR CERTIFICATION.

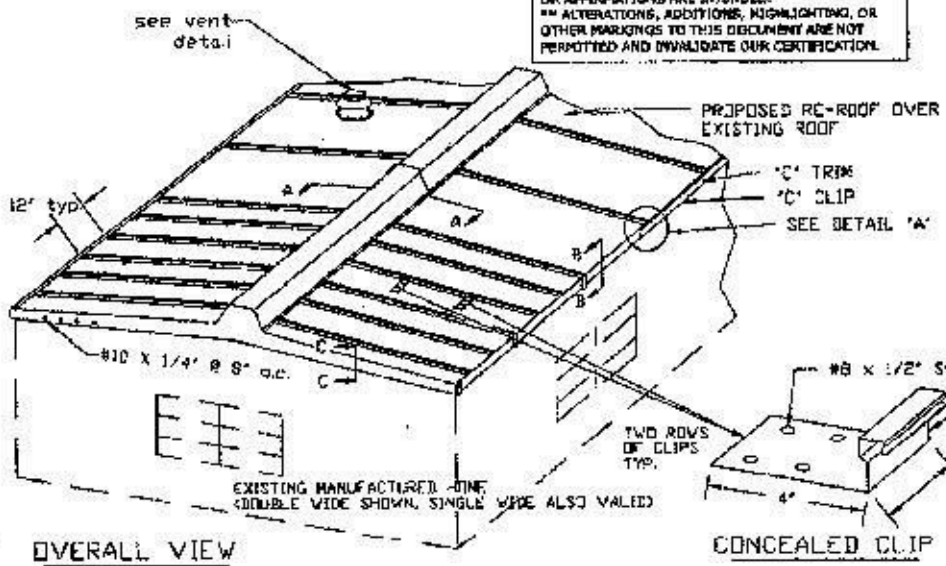

OVERALL VIEW

CONCEALED CLIP

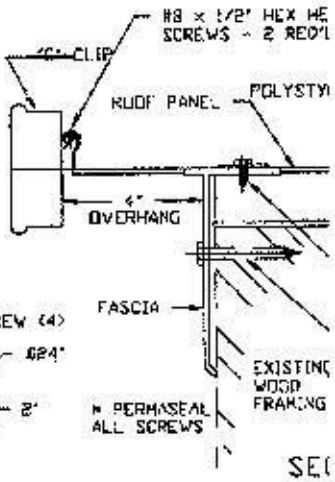

SEC
SHOWN

11/1/2005 - BillSam frank: P:\07 Project Files\Madden Mfg (1165)\MAN\2003 Jaspin\Hi-Ma\Hi-0007 Roof Over NPS\05-MAN-0007 Roof Over Mobile Home NPS.dwg

ROOF OVERLAY DETAIL

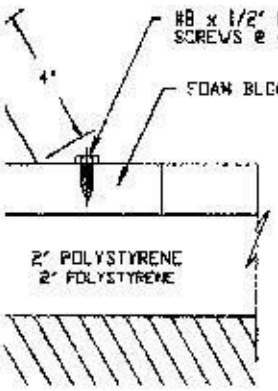

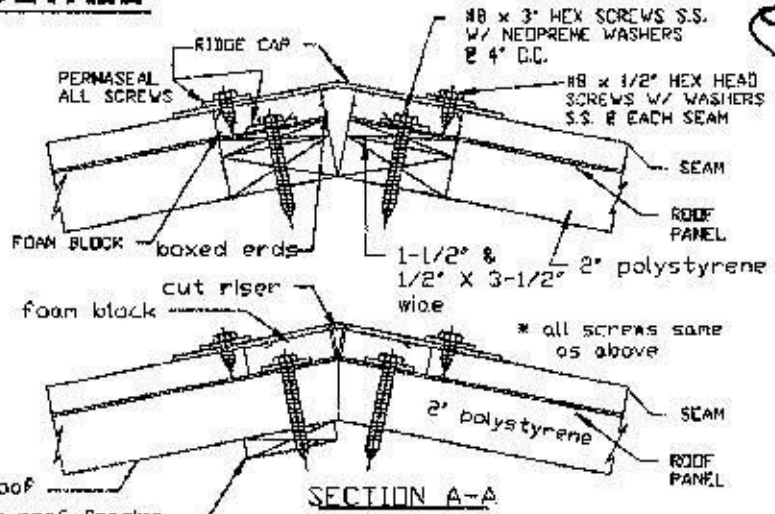

SECTION A-A
WITHOUT RAISED RIDGE CAP
TWO OPTIONS SHOWN

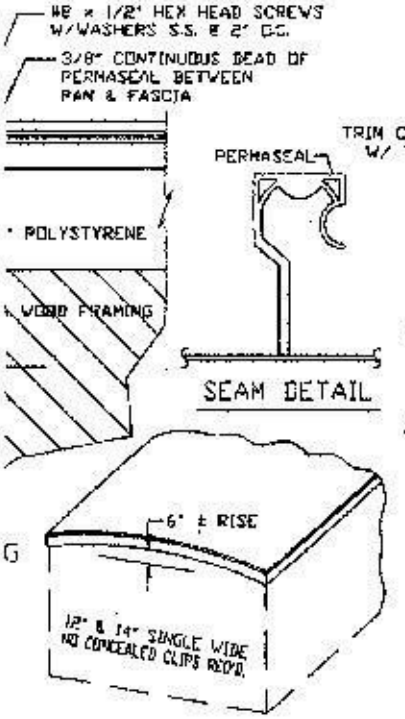

SEAM DETAIL

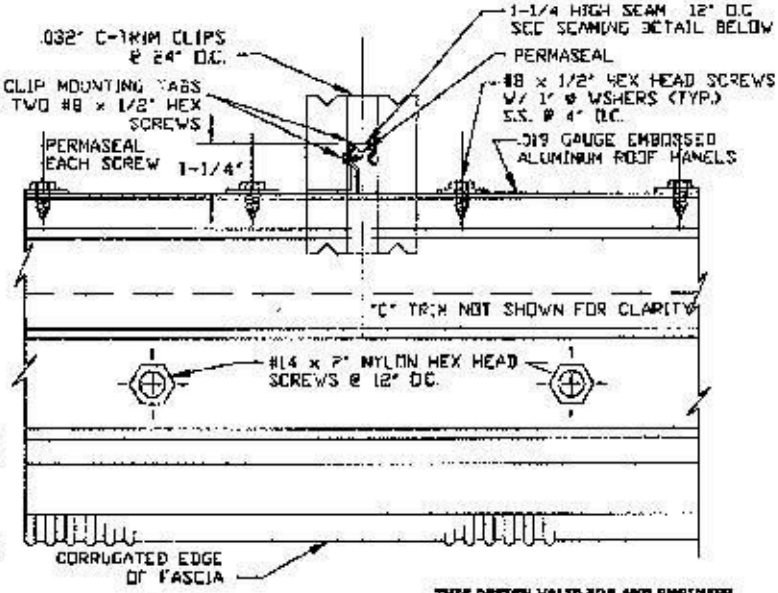

DETAIL A

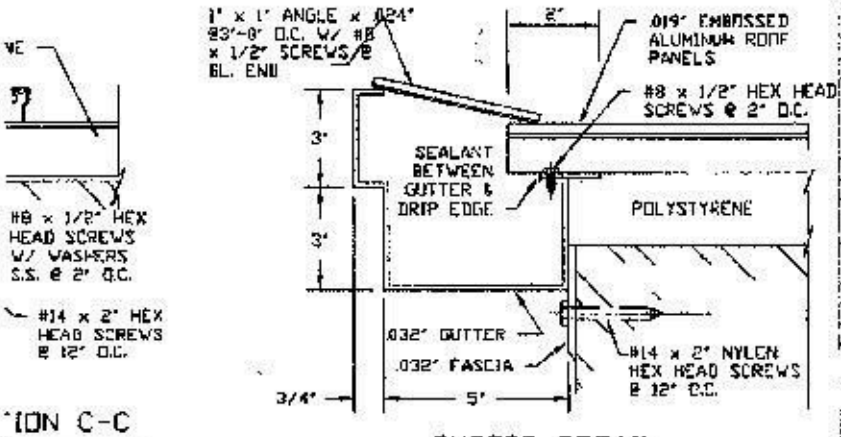

GUTTER DETAIL

ION C-C
WITH OVERHANG

THIS DESIGN VALID FOR AND ENGINEER CERTIFIED IN THESE STATES:

STATE	LICENSE NUMBER
ALABAMA	2656
CONNECTICUT	23864
FLORIDA	PE0046548
GEORGIA	27526
IDAHO	11090
LOUISIANA	30341
MAINE	10478
MARYLAND	26152
MASSACHUSETTS	43224
MICHIGAN	49491
MINNESOTA	43007
MISSISSIPPI	16927
MISSOURI	2003019621
MONTANA	15887
NEW HAMPSHIRE	10624
NEW JERSEY	24GE04363300
NEW YORK	73356
NORTH CAROLINA	PE027234
OHIO	68498
PENNSYLVANIA	PE080881
RHODE ISLAND	7828
SOUTH CAROLINA	21007
TEXAS	66064
VERMONT	8182
VIRGINIA	0402 058109

FRANK L. BENNARDO, P.E.
PE0046548

11/11/2005

VALID FOR (1) JOB(S) ONLY
VALID ONLY WITH RAISED ENGINEER SEAL

FRANK L. BENNARDO, P.E., INC.
CONSULTING ENGINEERS
4441 N. DIXIE HIGHWAY
BOCA RATON, FL 33431
PH: (561) 391-2888 FAX: (561) 391-2862
CERTIFICATE OF AUTHORIZATION: #9985
ENGINEERING EXPRESS®
WWW.ENGEXP.COM

MADDEN MANUFACTURING
1901 NW 22 STREET
POMPANO BEACH, FL 33069

ROOF OVER MANUFACTURED HOME MASTER PLAN SHEET
RAINBOW ROOF SYSTEMS
BY MADDEN MANUFACTURING (POMPANO, FL & OZARK, MO)

REMARKS	DRWN	CHKD	DATE
UNIT SIZE			

THE COMPANY IS THE PROPERTY OF FRANK L. BENNARDO, P.E., INC. AND MUST BE RETURNED UPON REQUEST. REPRODUCTION IN WHOLE OR IN PART WITHOUT WRITTEN CONSENT IS PROHIBITED. THE CONTENT WAS NOT PRAPARED FOR ANY OTHER PURPOSE THAN THE PROJECT NAMED ON THIS PAGE.
COPYRIGHT FRANK L. BENNARDO P.E.

05-MAM-0007

SCALE: NTS 01

PAGE DESCRIPTION:
LAYOUT - DETAIL

1 OF 1